rev:	revision text:	rev.date:	rev.by:	aprv. date:	aprv. by:
01	general simplification	2023-12-14	KaiGünd	2023-12-19	MicNaeb
02	center marks changed	2025-07-10	LenEhre	2025-07-10	MicNaeb

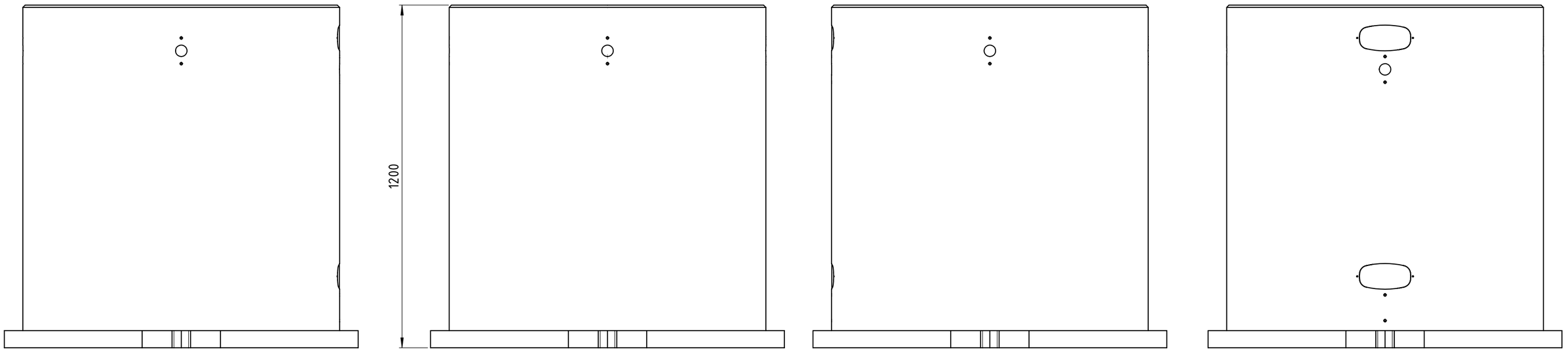

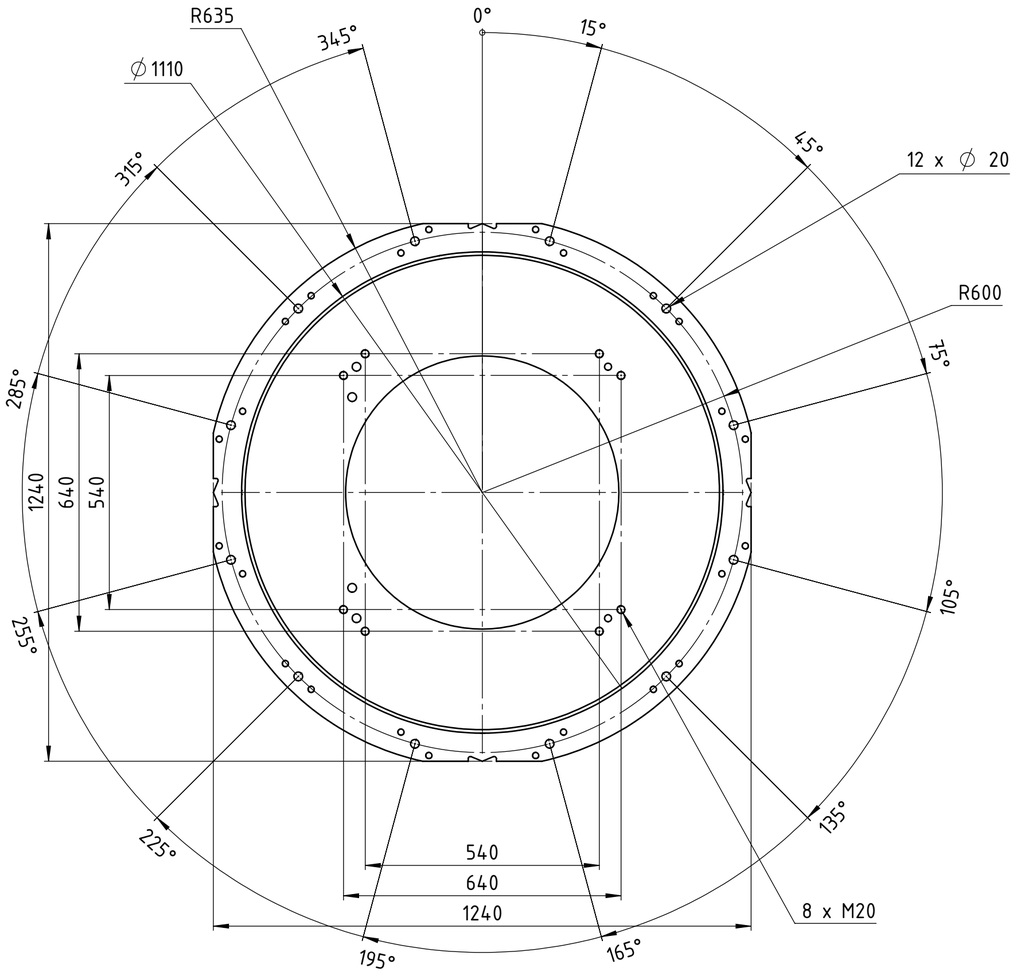

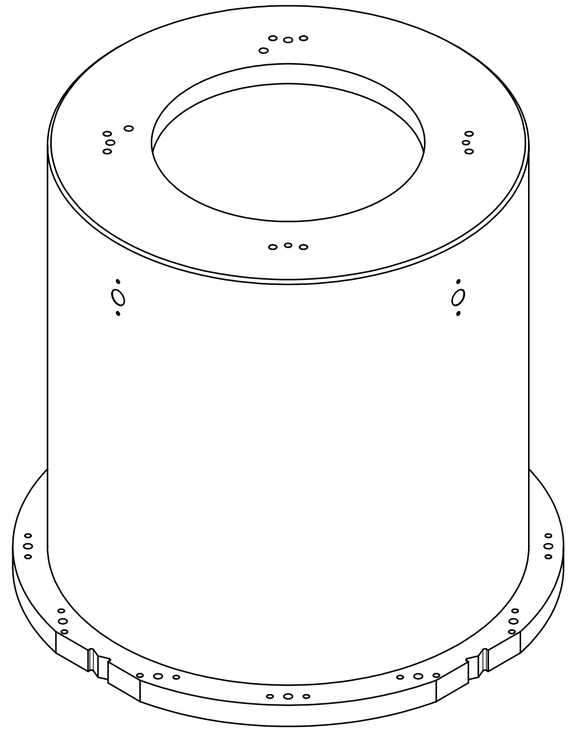

CONFIDENTIAL! The reproduction, distribution and utilization of this document as well as the communication of its contents to others without express authorization is prohibited. Offenders will be held liable for the payment of damages. All rights reserved in the event of the grant of a patent, utility model or design

where nothing else is indicated:
tolerances: DIN ISO 2768-mH
welding: DIN EN ISO 13920-A
edges: DIN EN ISO 13715
-0,3
-0,5
+0,3

status: Released
SAP EMEA no:
SAP AH no: 219371
title / description: robot stand R-1200

YASKAWA
www.yaskawa.eu.com

dimension: 1240x1240x1200 mm		weight: 595,035 kg	
created:	2023-06-30	MicNaeb	
drawn:	2023-06-30	MicNaeb	sheet:
approved:	2023-07-06	MatWied	A2
drawing-no.: 0000075387-100		revision: 02	1:10 4/5