rev.	revision text	rev.date	rev.by	gpm. date	gpm. by
02	general adaptivation	2023-12-14	Rutland	2023-12-15	McNaab
03	center marks changed	2023-07-19	Lindhoe	2023-07-19	McNaab

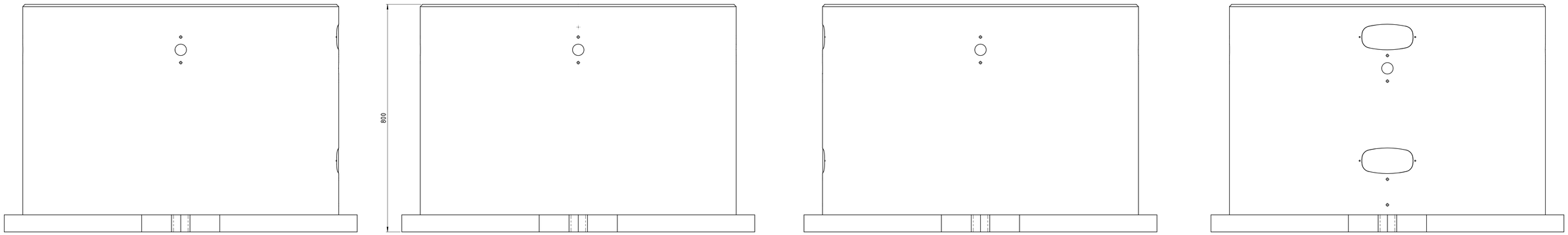

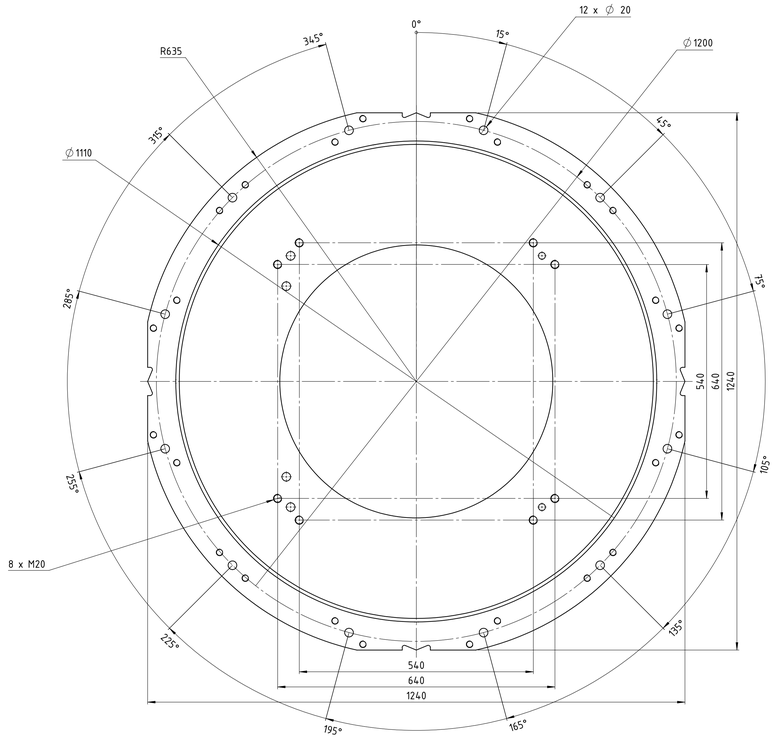

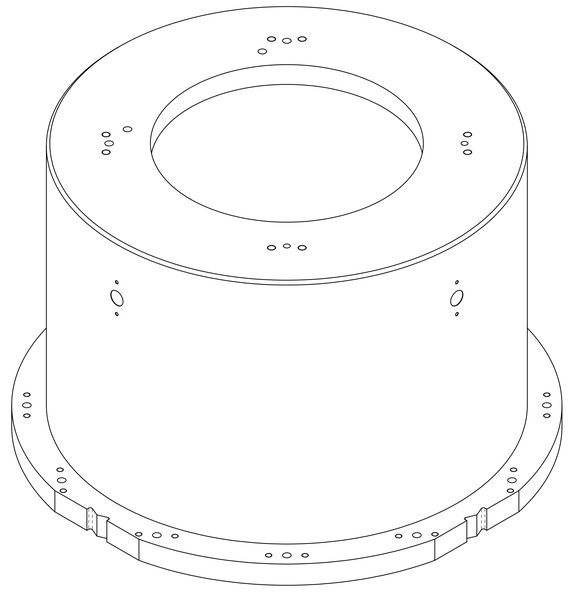

CONFIDENTIAL: The reproduction, distribution and utilization of this document as well as the communication of its contents to others without express authorization is prohibited. Offenders will be held liable for the payment of damages. All rights reserved in the event of the grant of a patent, utility model or design.

where nothing else is indicated tolerances: DIN ISO 2768-mH welding: DIN EN ISO 13920-A edges: DIN EN ISO 13715 0.3 / 0.5 / 1.0 / 1.5	status: Released SAP EMEA no:	SAP AH no: 230788	YASKAWA www.yaskawa.eu.com	dimension: 1240x1240x800 mm created: 2023-07-19 drawn: 2023-07-19 approved: 2023-07-19 drawing-no.: 0001060264-100	weight: 530.127 kg McNaab McNaab RaSeid revision: 03
	title / description: robot stand R-800				sheet: A0 1.5 / 4/5